HZC010 / HZC011
HZC014 / HZC016

EN Handle — User instructions

ZH 手柄 — 说明书

6H 5121.d

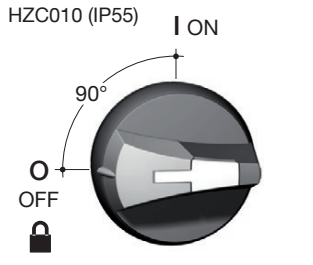

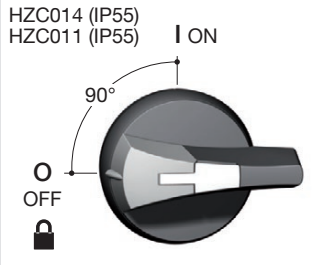

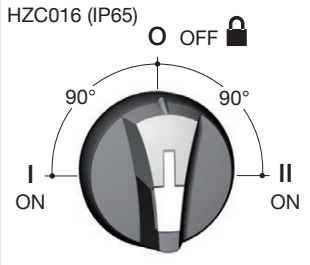

Edition 12/13 - IS 535621-D / RECTO-VERSO / S blanc offset quadri 80g/m²

To remove
卸除

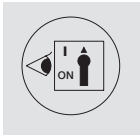

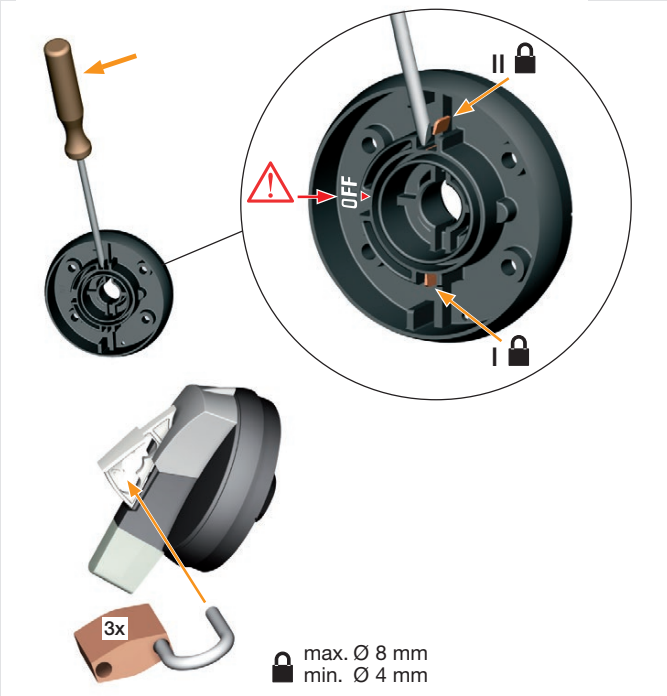

HAZARDOUS VOLTAGE

This equipment must be installed and serviced only by qualifiedelectrical personnel. Turn off all power supplying this equipmentbefore working on or inside equipment. Always use a properly ratedvoltage sensing device to confirm power is off. Replace all devices,doors, and covers before turning on power tothis equipment.Failure to follow these instructions will result in death or seriousinjury.

危险电压

此类装置必须只由专业人员进行安装和维护，在电气装置上或内部进行操作前必须关掉所有外部供电电源。使用合适的额定电压测量装置来确认电源已经断开关闭。在电气装置关电前必须重新放好所有的部件,柜门和开关盖。不遵守以上预警将导致严重伤害或死亡。

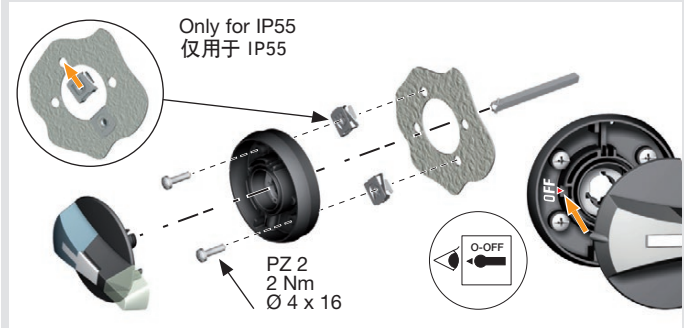
Only for IP55
仅用于 IP55
PZ 2
2 Nm
Ø 4 x 16
O-OFF
OFF

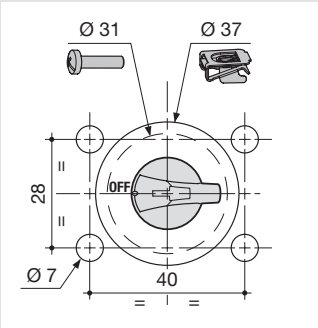
Ø 31
Ø 37
28
OFF
Ø 7
40

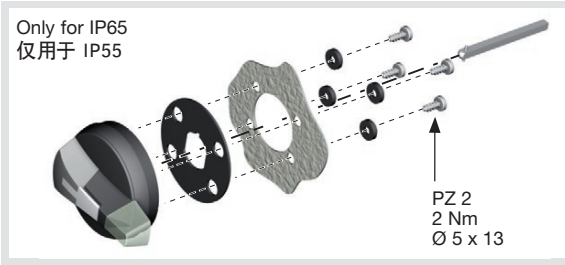
Only for IP65
仅用于 IP55
PZ 2
2 Nm
Ø 5 x 13

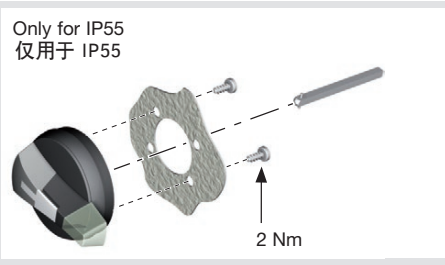
Only for IP55
仅用于 IP55
2 Nm

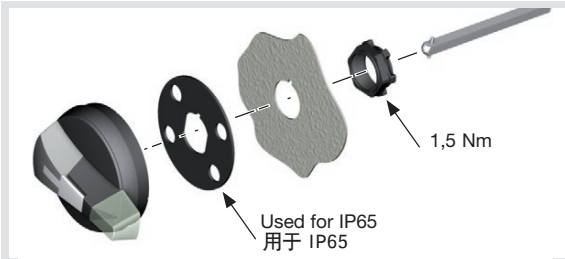
1,5 Nm
Used for IP65
用于 IP65

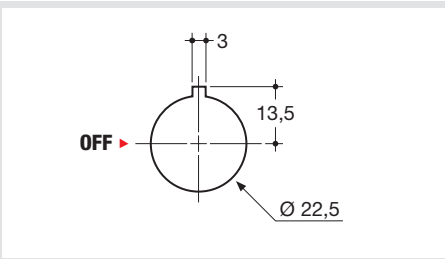
3
13,5
OFF
Ø 22,5

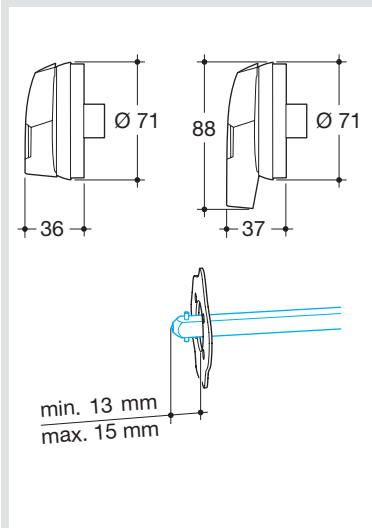
Ø 71
36
88
Ø 71
37
min. 13 mm
max. 15 mm

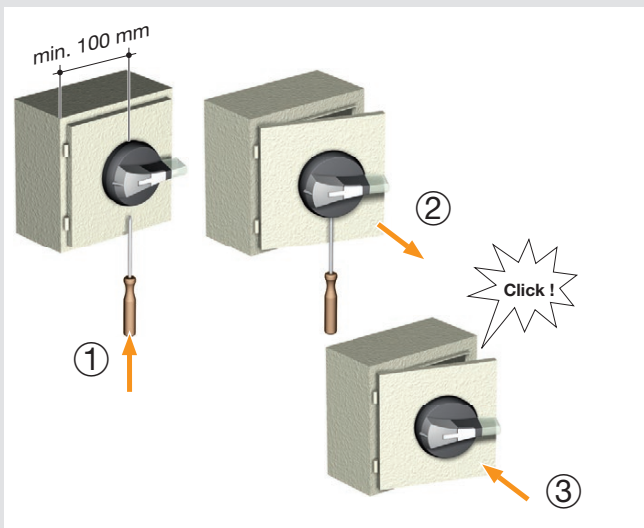
min. 100 mm
①
②
Click !
③