INSTRUCTIONS OF HOT TAPPING

NAVAL HOT TAPPING TOOL / HOT TAPPING VALVES:

Operating instructions for NAVAL hot tapping tool when used together with NAVAL hot tapping valves.

- Locate the exact point for the joint on the main pipe line and prepare the main pipe for welding of the valve.
- Check the place of the joint on the main pipe (if main pipe is a weld seam tube, avoid welding the hot tapping valve on the weld seam on the main pipe)
- Prepare the weld end of the hot tapping valve to match with the radius of the main pipe and taper the edges as required for the best welding result (see sketch 1).
  The weld seam has to comply with the local requirements for size and strength. A support collar is to be used when necessary.
  Note! The threaded end of the valve may be prepared for welding or shortened only after the drilling through the main pipe has been carried out.

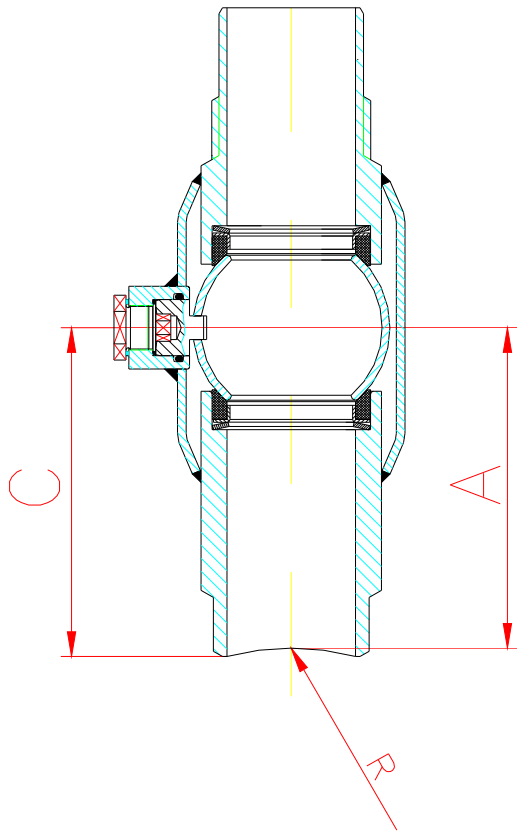

Sketch 1

- The valve may be welded to any angle 0-360° on the main pipe (see sketch 2). The valve is to be at an angle of 90° with the longitudinal axis of the main pipe line (see sketch 3).

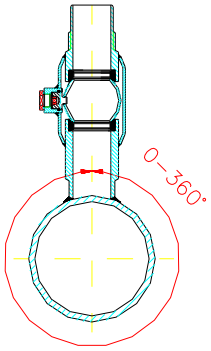

sketch 2

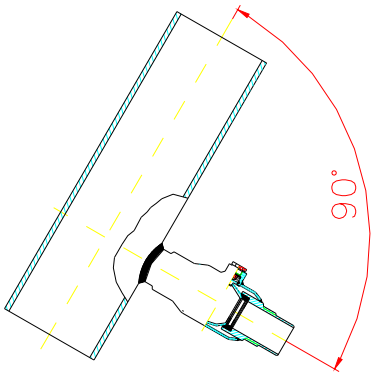

sketch 3

- After welding the tightness of the weld seam can be tested e.g. by pressure testing the joint by compressed air through the draining valve in the hot tapping tool.

- Now select a hole saw in size that corresponds to the DN size of the valve. Also select a respective size socket and adapter from the case. First install the adapter to the tool and after that install the socket assembly (socket assembly = socket + center drill bit + hole saw) on the shaft of the tool.

- Check that the edge of the Frame I is aligned with the groove on the Frame II (see sketch 4, the groove is in the threaded area of the Frame II). This set up correcponds to the maximum feeding distance. This position must not be exceeded under any circumstances when the tool is pressurized.
  Make sure that the valve is fully OPEN. Attach the tool assemby complete to the threads on the valve. Test that the hole saw can freely slide through the ball in the valve.

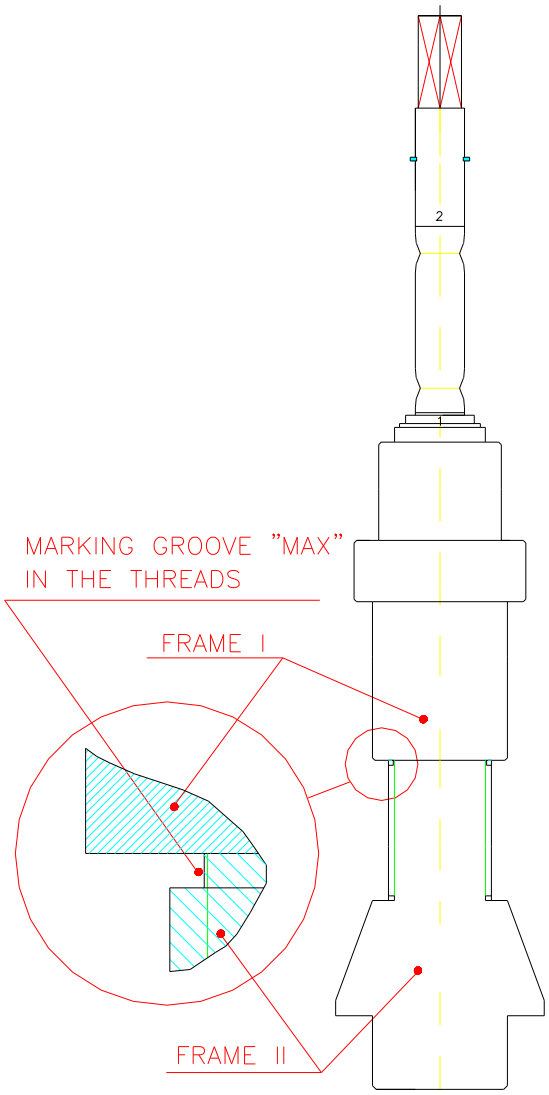

Sketch 4

Attach draining valve + hose to Frame II and close the draining valve.

- Before drilling through the main pipe test that the valve can be closed:
  Release the shaft locking by pulling the spring loaded part # 400012 (see appendix 1) and slide out the shaft until it mechanically stops at the outermost position. Close and open the hot tapping valve for verifying a proper operation of the valve.

- Select a locking position that corresponds to the size of the hot tapping valve and lock the shaft to the selected position (three alternatives -> see appendix 1)

- Before drilling check the following details with the drilling machine:
  - rotation direction to be clockwise
  - the percussion function <u>must not</u> be on under any circumstances
  - select the speed of rotation: area 1 or 2 (see sketch 5)
  - set the rpm speed, scale A – F (see sketch 6)

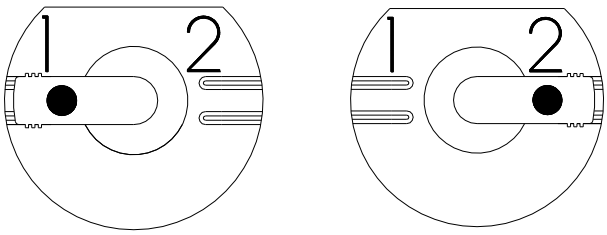

sketch 5

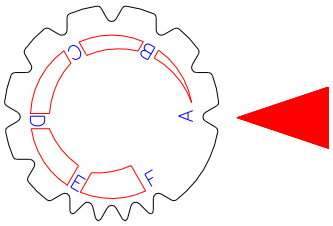

sketch 6

When starting the drilling, i.e. when drilling the center hole, use high rpm (460 rpm) area 2 and scale F. Use steady and smooth feeding.

During the drilling it is recommended to keep the draining valve open for removing the cuttings.

- Stop after drilling through with the center drill bit only. Adjust the speed of rotation area (1 or 2) and scale (A-F) for the actual hole cutting and close the draining valve.

- Carry out the feeding for the hole saw steady and smooth. During the cutting you may keep the draining valve open. Close the draining valve after finishing the cutting.

- Release the shaft locking and slide the shaft to the outermost position (due to pressure in the valve the shaft slides out automatically). Then close the hot tapping valve.

- Open the draing valve for releasing the pressure from the hot tapping valve.

NOTE! Before removing the drilling tool from the hot tapping valve make sure that the hot tapping valve is in fully closed position.
Check the markings at the stem to make sure that the hot tapping valve is fully closed.
The tightness of the hot tapping valve must be verified by the draining valve.
There must be no water flow at all through the draining valve after the hot tapping valve is close

- Disassemble the drilling tool. Remove first the draining valve and after that remove the tool complete (incl. adapter) from the hot tapping valve. Then disassemble the tool.

- Closing the stem by welding:
  If so required the stem can be permanently closed by welding. Remove the PTFE sealing underneath the cap. Take care of the proper cooling of the stem to avoid damaging the stem O-rings.

- We recommend the following options for the drilling machine

  MILWAUKEE PD2E 24RS
  BOSCH GSB20 – 2 RCE

  WHEN USING OTHER DRILLING MACHINES (brand , type) MAKE SURE THAT THEY FULFILL THE FOLLOWING CRITERIA:

  - input power min 1000 W
  - speed of rotation areas Area 1: 0 – 1000 rpm
    Area 2: 0 – 3000 rpm
  - required speed adjustments are available for different hole saw sizes
  - the diameter of the neck of the drilling machine to be 43 mm

  If you select other brand and models than above please check with the drilling machine manufacturer that the criteria will be fulfilled.

DN 25 -INSTALLATION DIMENSIONS AND SETTING OF RPM

LOCKING GROOVE Nr 1 **HOLE SAW Ø24**

MAIN PIPE LINE NOMINAL SIZE	A		B	C
DN 32	99	+2 -2	20	105
DN40	100	+0 -10	20	105
DN 50	101	+0 -10	20	105
DN 65	102	+0 -10	20	105
DN 80	102	+0 -10	20	105
DN 100	103	+0 -10	20	105
DN 125	103	+0 -10	20	105
DN 150	103	+0 -10	20	105
DN ≥ 200	105	+0 -10	20	105

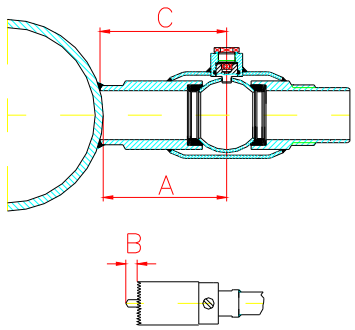

SPEED OF ROTATION:370 rpm
AREA 2
SCALE D

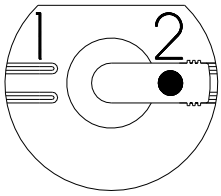

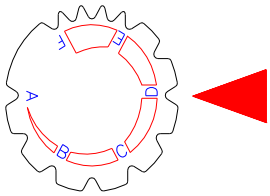

THE ABOVE GIVEN DIMENSION "A" MUST NOT BE EXCEEDED.
WITH MAINPIPE LINE SIZES DN32-40 THE FEEDING OF THE SAW MUST BE STOPPED AT LEAST 10mm BEFORE THE MAXIMUM FEEDING DISTANCE.
DIMENSIONS "A" ARE VALID FOR HOLE SAWS MANUFACTURED BY LENOX AND SANDVIK.

DN32 –INSTALLATION DIMENSIONS AND SETTING OF RPM

LOCKING GROOVE Nr 1 **HOLE SAW Ø30**

MAIN PIPE LINE NOMINAL SIZE	A		B	C
DN 40	85	+2 -0	20	93
DN 50	87	+0 -10	20	93
DN 65	89	+0 -10	20	93
DN 80	90	+0 -10	20	93
DN 100	91	+0 -10	20	93
DN 125	91	+0 -10	20	93
DN 150	92	+0 -10	20	93
DN 200	92	+0 -10	20	93
DN 300	92	+0 -10	20	93
DN 400	92	+0 -10	20	93
DN ≥500	93	+0 -10	20	93

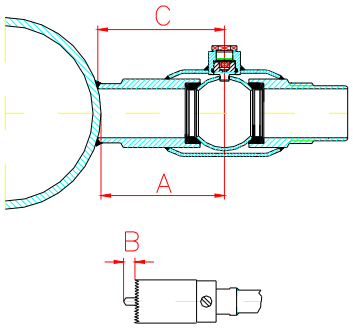

SPEED ROTATION:285 rpm
AREA 2
SCALE D

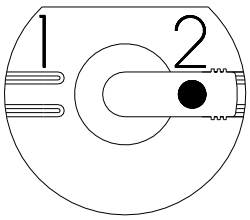

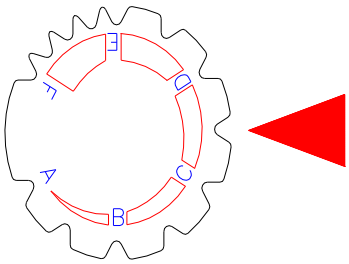

IF DIMENSION "A" FOR DN40 IS AFTER WELDING SMALLER THAN THE GIVEN SETTING VALUE (85mm) THE FEEDING DISTANCE MUST BE SHORTENED RESPECTIVELY IN ORDER TO AVOID DRILLING THROUGH THE OTHER SIDE OF THE MAIN PIPE LINE WITH THE CENTER DRILL, WITH BIGGER SIZES THER IS NO RISK OF DRILLING THROUGH.
DIMENSION "A" ARE VALID FOR HOLE SAWS MANUFACTURED BY LENOX AND SANDVIK

DN40-INSTALLATION DIMENSIONS AND SETTING OF RPM

LOCKING GROOVE Nr 1 **HOLE SAW Ø38**

MAIN PIPE LINE NOMINAL SIZE	A		B	C
DN 50	90	+0 -10	20	111
DN 65	93	+0 -10	20	111
DN 80	94	+0 -10	20	111
DN 100	95	+0 -10	20	111
DN 125	96	+0 -10	20	111
DN 150	96	+0 -10	20	111
DN 200	97	+0 -10	20	111
DN ≥300	98	+0 -10	20	111

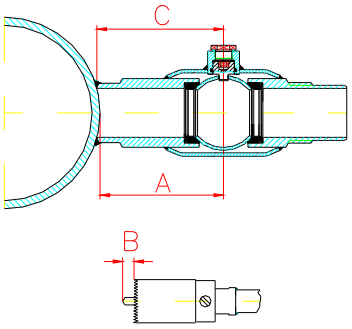

SPEED OF ROTATION:230 rpm
AREA 2
SCALE B1

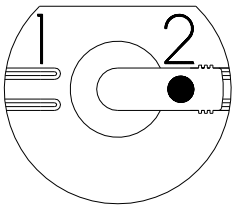

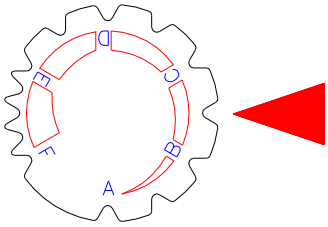

FOR MAIN LINE SIZES ≥ DN100 WITH WALL THICKNESS ≥10mm
THE SETTING DIMENSIONS "A" ARE RECOMMENDED TO BE 10mm SMALLER THAN THE VALVES GIVEN IN THE TABLE ABOVE THIS IS TO QUARANTEE THAT THE HOLE SAW GOES FULLY THROUGH THE WALL OF THE MAIN PIPE.DIMENSIONS "A" ABOVE ARE VALID FOR LENOX HOLE SAW.
IF SANDVIK HOLE SAW ARE USED AN ADDITIONAL 10mm MUST BE DEDUCTED FROM ALL THE DIMENSIONS "A" ABOVE (SANDVIK HOLE SAW WITH 38mm DIAM. IS 10mm SHORTER THAN RESPECTIVE LENOX HOLE SAW).
E.G REDUCE 20mm (10+10mm) FROM DIMENSION "A" WHEN PIPELINE DN100 WITH WALL THICKNESS ≥ 10mm IS USED.

DN50-INSTALLATION DIMENSIONS AND SETTING OF RPM

LOCKING GROOVE Nr 2 **HOLE SAW Ø48**

MAIN PIPE LINE NOMINAL SIZE	A		B	C
DN 65	120	+0 -0	20	131
DN 80	121	+0 -10	20	131
DN 100	124	+0 -10	20	131
DN 125	126	+0 -10	20	131
DN 150	127	+0 -10	20	131
DN 200	128	+0 -10	20	131
DN 300	129	+0 -10	20	131
DN 400	129	+0 -10	20	131
DN ≥ 500	131	+0 -10	20	131

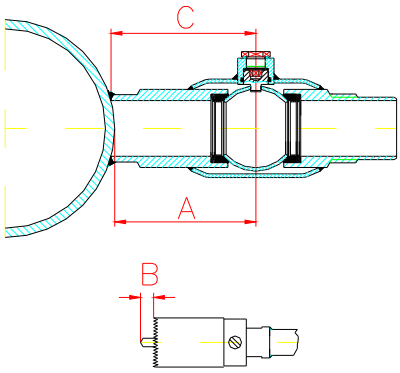

SPEED OF ROTATION:180 rpm
AREA 1
SCALE E

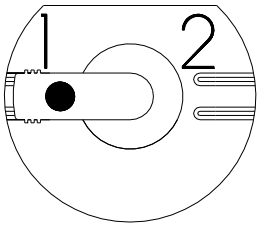

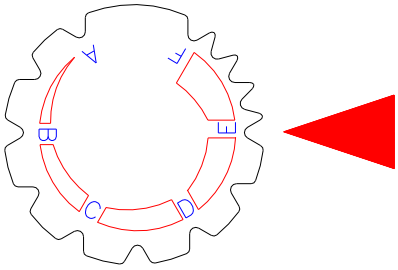

THE ABOVE GIVEN DIMENSION "A" MUST NOT BE EXCEEDED.
WITH MAINPIPE LINE SIZES DN65-80 THE FEEDING OF THE THE SAW MUST BE STOPPED AT LEAST 10mm BEFORE THE MAXIMUM FEEDING DISTANCE !
DIMENSION "A" ARE VALID FOR HOLE SAWS MANUFACTURED BY LENOX AND SANDVIK.

DN65-INSTALLATION DIMENSIONS AND SETTING OF RPM

LOCKING GROOVE Nr 3 **HOLE SAW Ø64**

MAIN PIPE LINE NOMINAL SIZE	A		B	C
DN 80	123	+2 -0	20	140
DN 100	127	+0 -10	20	140
DN 125	130	+0 -10	20	140
DN 150	132	+0 -10	20	140
DN 200	134	+0 -10	20	140
DN 300	136	+0 -10	20	140
DN 400	137	+0 -10	20	140
DN 500	138	+0 -10	20	140
DN 600	139	+0 -10	20	140
DN ≥800	140	+0 -10	20	140

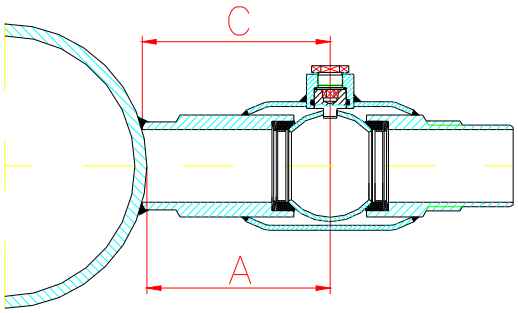

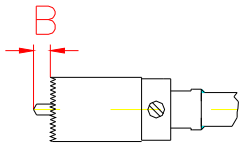

SPEED OF ROTATION:135 rpm
AREA 1
SCALE C

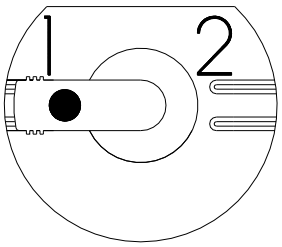

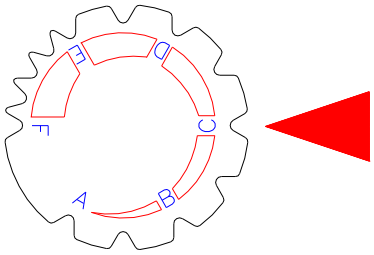

DIMENSIONS "A" ARE VALID FOR HOLE SAWS MANUFACTURED BY LENOX AND SANDVIK

DN 80-INSTALLATION DIMENSIONS AND SETTING OF RPM

LOCKING GROOVE Nr 3 **HOLE SAW Ø76**

MAIN PIPE LINE NOMINAL SIZE	A		B	C
DN 100	138	+0 -10	20	154
DN 125	142	+0 -10	20	154
DN 150	145	+0 -10	20	154
DN 200	147	+0 -10	20	154
DN 250	149	+0 -10	20	154
DN 300	150	+0 -10	20	154
DN 400	151	+0 -10	20	154
DN 500	152	+0 -10	20	154
DN 600	153	+0 -10	20	154
DN ≥800	154	+0 -10	20	154

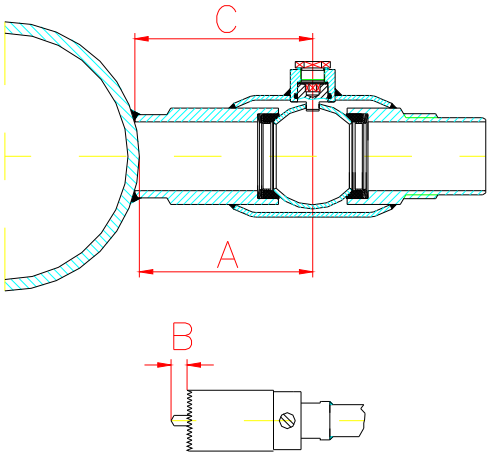

SPEED OF ROTATION:115 rpm
AREA 1
VALID B

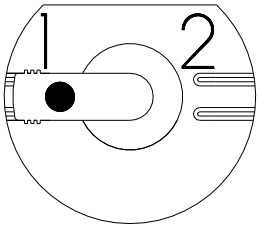

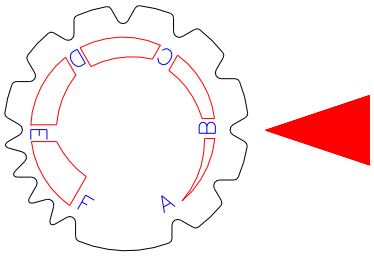

DIMENSIONS "A" ARE VALID FOR HOLE SAWS MANUFACTURED BY LENOX AND SANDVIK

DN100- INSTALLATIN DIMENSIONS AND SETTING OF RPM

LOCKING GROOVE Nr 3 **HOLE SAW Ø95**

MAIN PIPE LINE NOMINAL SIZE	A		B	C
DN 125	132	+0 -10	20	157
DN 150	138	+0 -10	20	157
DN 200	143	+0 -10	20	157
DN 250	146	+0 -10	20	157
DN 300	148	+0 -10	20	157
DN 400	150	+0 -10	20	157
DN 500	152	+0 -10	20	157
DN 600	154	+0 -10	20	157
DN ≥ 800	157	+0 -10	20	157

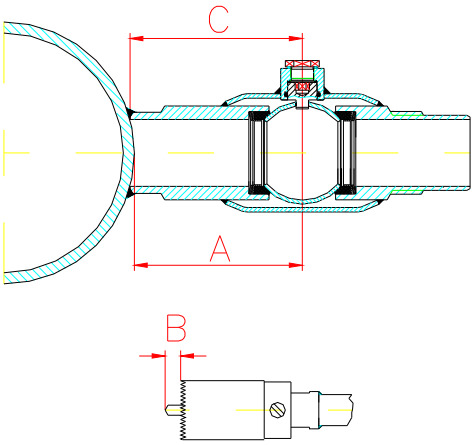

SPEED OF ROTATION:<u>90 rpm</u>
AREA 1
SCALE A

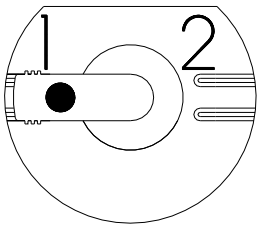

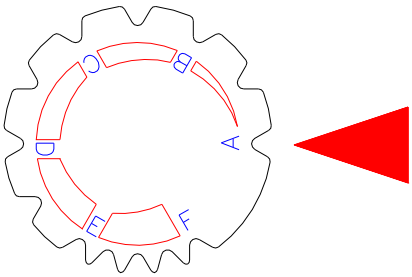

DIMENSIONS "A" ARE VALID FOR HOLESAWSMANUFACTURED BY LENOX AND SANDVIK

DN 125/150 – INSTALLATION DIMENSIONS AND SETTING RPM

LOCKING GROOVE Nr 3 **HOLESAW Ø121**

MAIN PIPE LINE NOMINAL SIZE	A		B	C
DN 200	153	+0 -10	20	175
DN 250	158	+0 -10	20	175
DN 300	161	+0 -10	20	175
DN 400	165	+0 -10	20	175
DN 500	165	+0 -10	20	175
DN 600	168	+0 -10	20	175
DN ≥ 800	170	+0 -10	20	175

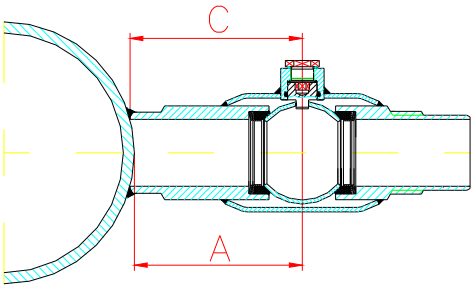

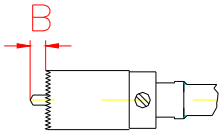

SPEED OF ROTATION:90 rpm
AREA 1
SCALE A

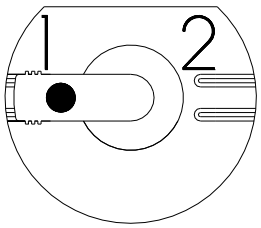

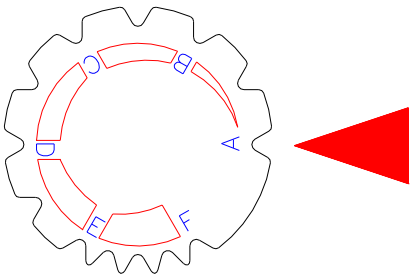

DIMENSIONS " A" ARE VALID FOR HOLESAWS MANUFACTURED BY LENOX AND SANDVIK

BIG DRILLING BOX, PRODUCT NUMBER: 287195

DN25-150 DRILLING

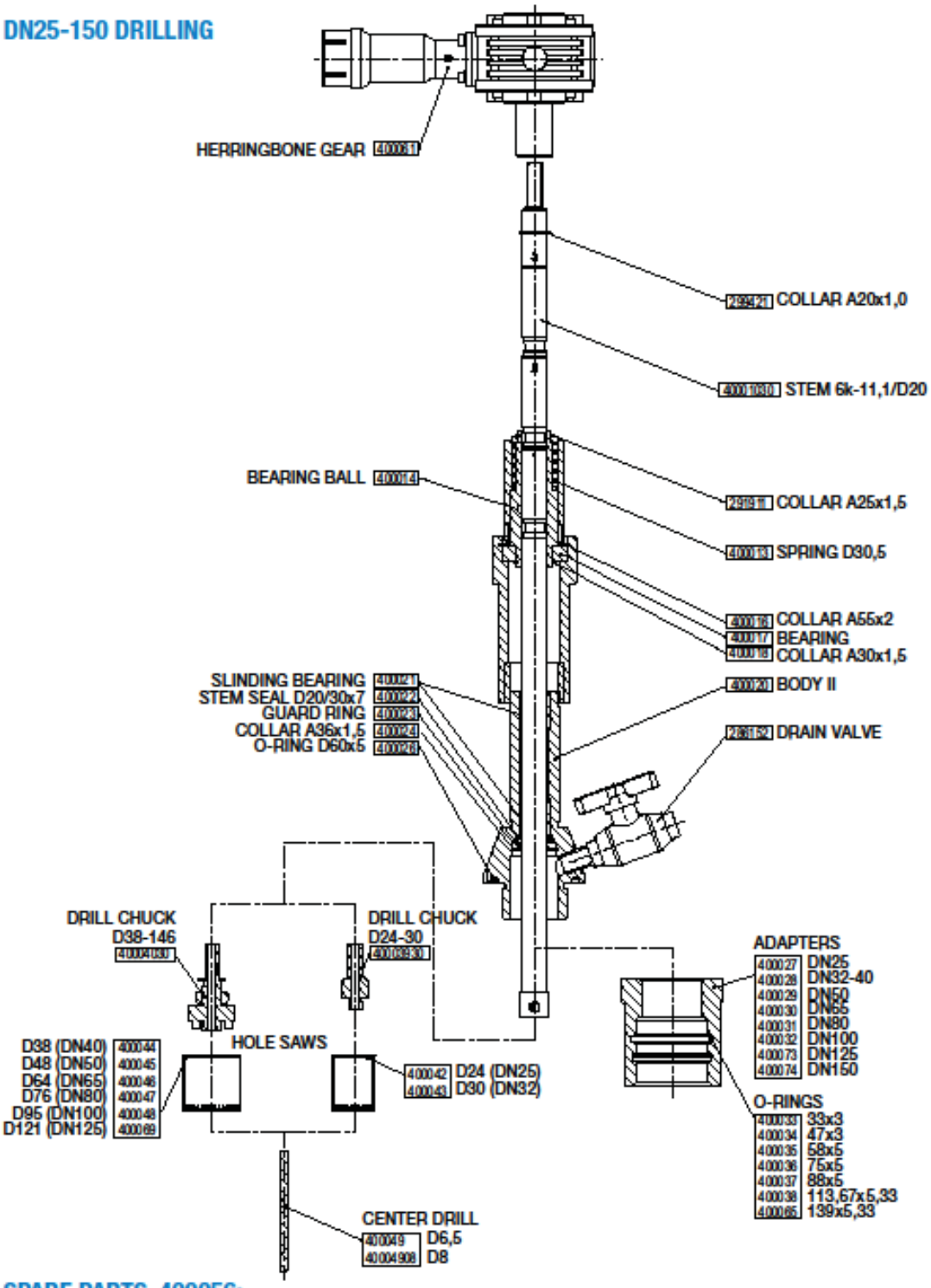

SPARE PARTS, 400056:

- Stem seal D20/20x7 400022
- O-rings 400033, 400034, 400035, 400036, 400037, 400038, 400026
- Center drill D6,5 400049

DN200 DRILLING PARTS

- Holesaw D146, 400072
- Stem 6k-11,1/DN150-200, 40001080
- Adapter DN200, 400067
- Drill chuck 400240

SMALL DRILLING BOX, PRODUCT NUMBER: 287194

DN20-32 DRILLING

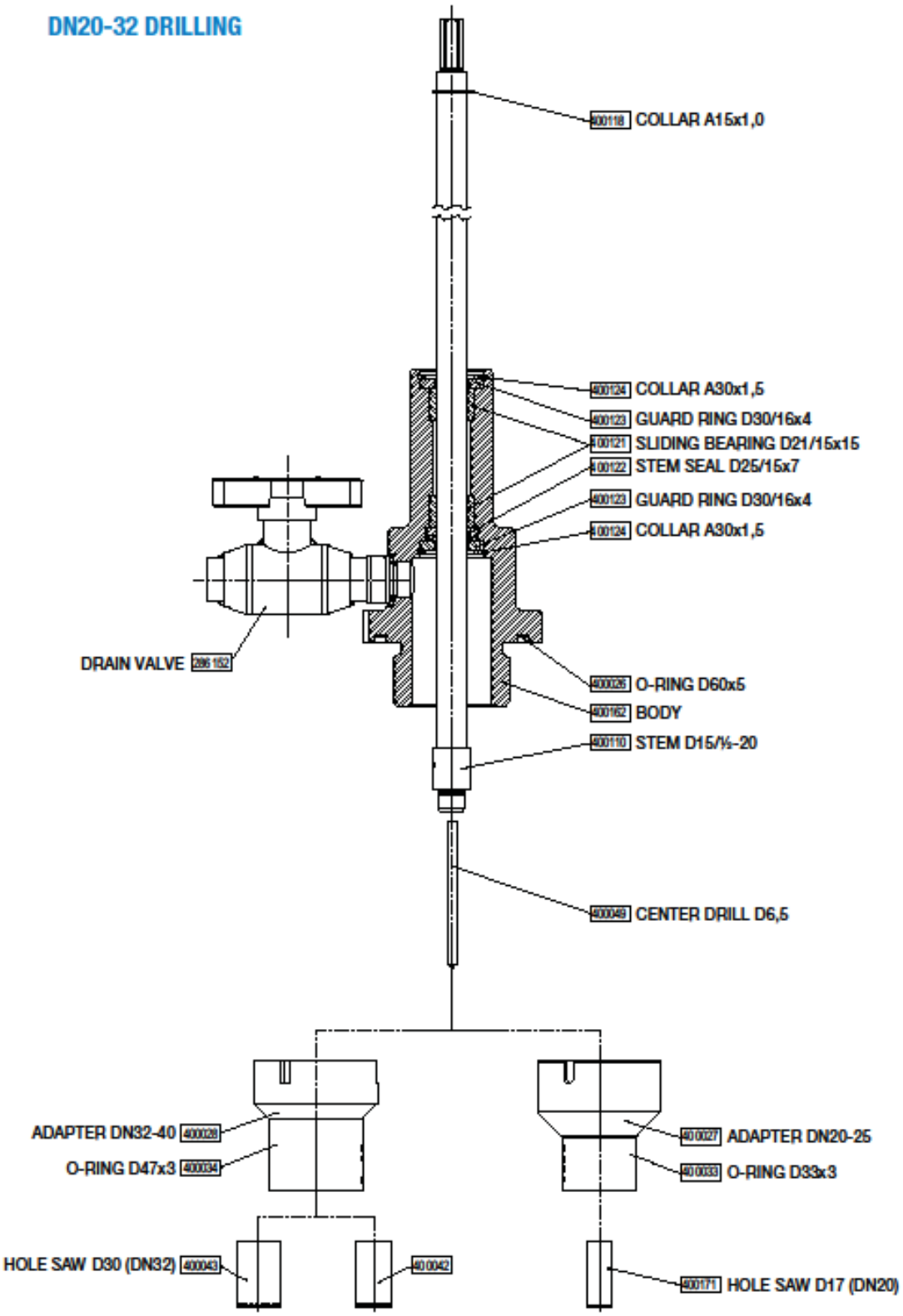

SPARE PARTS, 400156:

- Stem seal D25/15x7 400122
- O-rings 400026, 400033 JA 400034