Technical data sheet

Combination arrestor V50, 3-pole + NPE 385 V

Item no. 5093586

Lightning current combination arrestor, type 1+2

- For lightning current equipotential bonding to VDE 0185-305 (IEC 62305)
- Lightning current arresting capacity of 12.5 kA (10/350) per pole and up to 50 kA (10/350) in total
- Modular, plug-in arrestor with cut-off unit and visual status display
- Locking mechanism with vibration protection and voltage keying
- Plastic to UL 94 V-0
- The remote signalling (FS) variants have a potential-free changeover contact for remote signalling

Application: Lightning current equipotential bonding for buildings of class III and IV.

Type 1+2 | LPZ 0→2

PA Polyamide

Additional product text 1	* Complete = Plug-in arrester and base

Dimensions

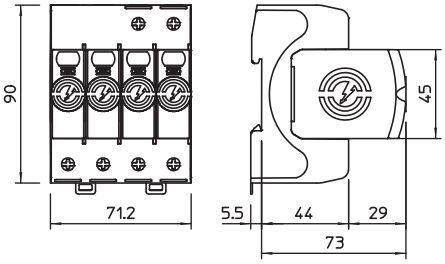

Master data

Item no.	5093586
Type	V50-3+NPE-385
Description 1	CombiController V50
Description 2	3-pole with NPE
Dimension	385V
Material	Polyamide

Technical data sheet

Combination arrestor V50, 3-pole + NPE 385 V

Item no. 5093586

Master data

Material symbol	PA
Smallest sales unit (VG)	1,00 Piece
Weight	64,50 kg/100 pc.

Technical data

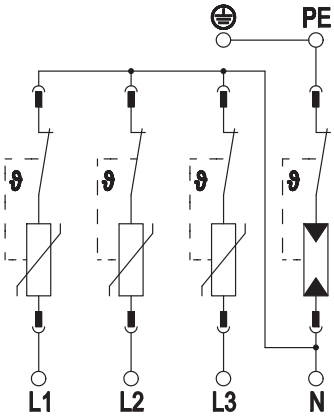

SPD to EN 61643-11	Type 1+2
SPD to IEC 61643-11	Class I+II
SPD to UL 1449	Type 4
Nominal voltage AC (50/60 Hz)	230,00 V
Maximum continuous voltage AC	385,00 V
Maximum continuous voltage (L-N)	385,00 V
Maximum continuous voltage (N-PE)	255,00 V
Nominal frequency	50,00 Hz
Nominal discharge current (8/20 µs)	30,00 kA
Nominal discharge current (8/20 µs) [L-N]	30,00 kA
Maximum discharge current (8/20 µs)	50,00 kA
Maximum discharge current (8/20 µs) [L-N]	50,00 kA
Lightning surge current (10/350 µs)	12,50 kA
Lightning surge current (10/350 µs) [N/PE]	50,00 kA
Lightning surge current (10/350 µs) [L-N/PE]	12,50 kA
Lightning surge current (10/350)	50,00 kA
Arrestor surge current (8/20 µs) [total]	80,00 kA
Combined voltage protection level [L-PE]	2,50 kV
Protection level	1,70 kV
Protection level [L-N]	1,70 kV
Protection level [N-PE]	1,50 kV
Residual voltage [L-N] @ 1 kA	1,1 kV
Residual voltage [L-N] @ 5 kA	1,2 kV
Residual voltage [L-N] @ 7 kA	1,2 kV
Residual voltage [L-N] @ 12.5 kA	1,3 kV
Follow current quenching capacity (eff) [N-PE]	0,10 kA
Response time	25 ns
Response time [L-N]	25 ns
Response time [N-PE]	100 ns
Max. mains-side overcurrent protection	160 A gL/gG
Short-circuit withstand for max. mains-side overcurrent protection	50 kA eff
TOV voltage [L-N] – fail safe mode – 120 min.	670,00 V

Technical data sheet

Combination arrestor V50, 3-pole + NPE 385 V

Item no. 5093586

Technical data

TOV voltage [L-N] – withstand mode – 5 s	510,00 V
TOV voltage [N-PE] – withstand mode – 200 ms	1.200,00 V
Operating temperature range	-40-+80 °C
Humidity	5,00 - 95,00 %
Function/defect display	Optical
Ports	One-Port SPD
Pole version	3+N/PE
Pole number	4,00
Connection cross-section (min.)	1,50 mm²
Connection cross-section (max.)	35,00 mm²
Connection cross-section (min.)	16,00 AWG
Connection cross-section (max.)	2,00 AWG
Torque	4,00 Nm
Torque	35,00 Lbs
Mounting type	Hat rail 35 mm
Housing material	PA UL 94 V-0
Installation location	Interior
Protection rating	IP20
Installation dimensions (LxWxH)	90x71,2x78,5 mm
Minimum distance	1,50 mm
Approvals	UL
Switching power AC	230 V; 0,5 A
Switching power DC	230 V; 0,1 A / 75 V; 0,5 A
Connection cross-section, FM terminals	0,5-1,5 mm²
Connection cross-section, FM terminals	21-16 AWG
Torque for FM terminal	0,20 Nm
Torque for FM terminal	1,70 Lbs
Protective conductor current	< 5 µA
Blow-out	□
Size	4 part units
Remote signalling	□
Integrated back-up fuse	□
Max. cable cross-section flexible (fine-wire)	35,00 mm²
Max. cable cross-section rigid (single wire/multi-wire)	35,00 mm²
Conductor cross-section, flexible (fine-wire)	1,50 - 35,00 mm²
Conductor cross-section, flexible (fine-wire)	16,00 - 2,00 AWG
Conductor cross-section, rigid (single wire/multi-wire)	16,00 - 2,00 AWG
Conductor cross-section, rigid (single wire/multi-wire)	1,50 - 35,00 mm²
Signalling on device	Visual