Technical data sheet

Cable routing trunking, type LKM 60060

Item no. 6248608

Duct cover and base with base perforation.
Equipotential bonding is guaranteed between the cover and the base without any additional aids.
Note: LKM 60060 has no loop perforation in the base, a partition cannot be installed.

St	Steel
FSK	Strip galvanised/powder-coated

Additional product text 2	The base contains loop perforation allowing the attachment of the partition.

Master data

Item no.	6248608
Type	LKM60060RW
Description 1	Cable trunking
Description 2	with base perforation
Dimension	60x60x2000
Colour	Pure white
RAL number	9010
Material	Steel
Material symbol	St
Surface	Strip galvanised/powder-coated
Surface to DIN	DIN EN 10346
Surface symbol	FSK
Smallest sales unit (VG)	2,00 m
Weight	174,70 kg/100 m

Technical data sheet

Cable routing trunking, type LKM 60060

Item no. 6248608

Technical data

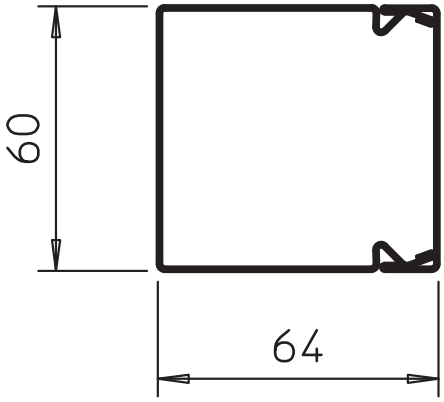

Length	2.000,00 mm
Width	60,00 mm
Height	64,00 mm
lampDimension WxH	60 x 64 mm
Number of fixed partitions	0,00
Number of insertable partitions	0,00
Cover version	Loose
Fastening type	Base perforation
Halogen-free	☑
Cable retaining clip	☑
Duct connector	☑
Usable cross-section	3.153,00 cm²
Protective film	☐